INSTRUCTION FOR USE

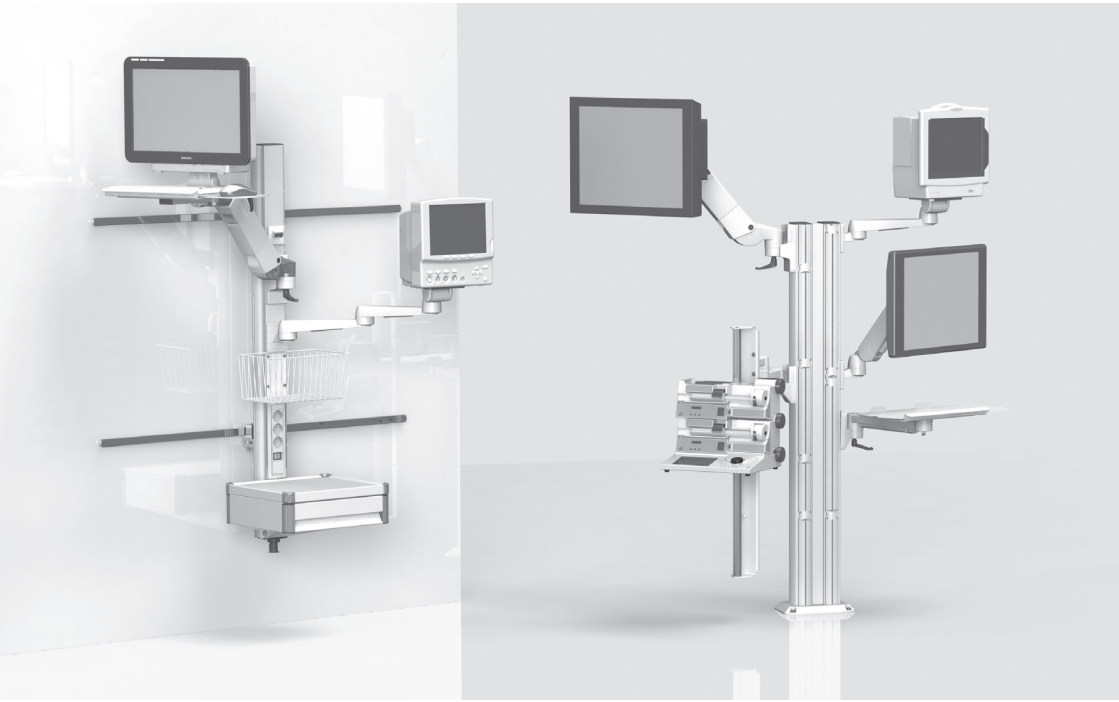

INSTRUCTION FOR USE

for stationary carrier systems (including the variable height support arms flexion-port and lf-port)

English

This is a class I medical device within the meaning of the European Medical Device Regulation (MDR) 2017/745, Appendix VIII.

The manufacturer declares that this product complies with the basic safety and performanc requirements pursuant to MDR 2017/745, Appendix IX, as documented by the CE mark.

This IFU is used by iTD GmbH as well as by TouchPoint Medical Inc. On the product label specific documentation concerning Legal Manufacturer per product is documented.

EC REP

ITD GmbH
Jahnstrasse 1
84347 Pfarrkirchen
Germany
Tel: + 49 89 61 44 25- 0
Web: www.itd-cart.com

TouchPoint Medical
dba iTD Corporation
2200 TouchPoint Drive
Odessa, FL 33556 USA
Tel: + 1 800 947 3901
Web: www.itd-cart.com

CE

MD

Sales and support:

North America	Europe
ITD Corporation Email: salesusa@itd-cart.com Local Agent USA: TouchPoint Medical dba iTD Corporation 2200 Touchpoint Drive Odessa, FL 33556 USA	ITD GmbH Email: sales@itd-cart.com
China	**Australia**
ITD Medical Technology Products (Shanghai) Co., Ltd. Email: saleschina@itd-cart.com	ITD Australia Pty Ltd Email: salesaustralia@itd-cart.com

Further information regarding sales and service is available on our website (www.itd-cart.com).

We work constantly to further develop our products. Please understand that we must reserve the right to make changes to the delivery package in terms of form, equipment and technology at any time.

Reproduction, multiplication or translation, in part or in entirely, is not permitted without the written permission of ITD GmbH!

All rights according to copyright law are expressly reserved for ITD GmbH.

Index 004

These instructions for usage are valid for the following products:

Type designation	Description
MZ.0xxx.xxx / 60xx.xxx	Stationary carrier systems and system components modul-port incl. rigid and swivel arms rm-port and mf-port and Variable height support arms flexion-port
RS.0xxx.xxx - 45xx.xxx	
TH.1xxx.xxx / 2xxx.xxx / 3xxx.xxx	
TS.0xxx.xxx - TS.09xx.xxx	
TS.6xxx.xxx / 9xxx.xxx	
ZV.9xxx.xxx	
HA.1xxx.xxx / 2xxx.xxx	System components and accessories variable height support arm systems flexion-port
HA.3xxx.xxx	Variable height support arms lf-port

KD.0xxx.xxx - KD.9xxx.xxx	Customer-specific, stationary carrier systems and variable height support arm systems flexion-port, lf-port
KU.0xxx.xxx – KU.9xxx.xxx	
KN.0xxx.xxx - KN.9xxx.xxx	
CD.0xxxx.xxx - CD.9xxxx.xxx	
CN.0xxx.xxx - CN.9xxx.xxx	
TP.0xxx.xxx - TP.9xxx.xxx	
OC.0xxx.xxx – OC.9xxx.xxx	
OM.0xxx.xxx – OM.9xxx.xxx	

English

1 Important information

1.1 Intended use ... 5
1.2 General explanation of symbols ... 5
1.3 Safety instructions ... 8

2 Assembly

2.1 Completeness ... 9
2.2 Instruction for use / Assembly Instructions ... 9
2.3 Horizontal swivel ... 9
2.4 Tilting / rotating equipment ... 10
2.5 Variable height support arm systems (flexion-port) ... 10
2.6 Wiring ... 11
2.7 Connection to existing infrastructure ... 11
2.8 Fixing system components ... 11
2.9 Load rating ... 11
2.10 Assembly / Operation ... 12
2.11 Additional mounting of system components ... 12
2.12 Dismantling and repositioning system components and accessories ... 12

3 Electrical safety

3.1 Positioning of electrical equipment ... 12
3.2 Support extrusion ... 13
3.3 Gases ... 13
3.4 Equipotential bonding ... 13
3.5 Plug-in cable connector ... 13
3.6 Combination of equipment ... 13
3.7 Central power cutout ... 14
3.8 EMC ... 14
3.9 Excluded from the final electrical inspection of system components and accessories ... 14
3.10 Minimum safety ... 15

4 Mechanical and electrical height adjustment ... 15

5 Miscellaneous

5.1 Cleaning and disinfection ... 16
5.2 Service / Repair ... 16
5.3 Environmental conditions ... 17
5.4 Disposal ... 17
5.5 Spare parts ... 17

6 Accessories ... 18

7 Maintenance ... 18

8 Technical data

8.1 Load capacity modul-port ... 19
8.2 Load capacity mf-port ... 19
8.3 Load capacity rm-port ... 19
8.4 Load capacity flexion-port ... 19
8.5 Load capacity lf-port ... 19

1 Important information

All products from ITD GmbH are manufactured for a long and trouble-free service life. Development, construction, sales and production are certified at ITD GmbH according to DIN EN ISO 13485.

This is a basis for:
- highest quality and a long service life
- easy, safe and ergonomic operation
- functional design
- optimisation for the planned usage

The products comply with the requirements of the European Medical Device Regulation (MDR) and bear the CE mark.

- Carefully read these instructions for usage from the beginning in order to become familiar with the functions step-by-step.
- Please be sure to address all questions or concerns to the manufacturer.
- The stationary carrier systems are only intended for the use as described.
- These instructions are to be kept for the service life of the product.

The system configurator is to make the instructions for usage of the overall configuration available to the final customer.
We expressly note here that the system configurator is responsible for the observance of IEC 60601-1 and the EMC norm IEC 60601-1-2 in the valid version!

1.1 Intended use

The functions of the stationary carrier systems of ITD GmbH are:
- mounting medical and IEC-tested devices according to the permitted load information in compliance with the requirements of IEC 60601-1 in the currently valid edition.
- Connection and distribution of mains voltage from the local electricity outlet as well as from data lines.
- Consolidation of original ITD system compontents and accessories.

Using the mobile equipment carrier, the medical equipment can be transported inside the building or arbitrarily positioned in the area before and after the application. Therefore, a flexible, economical efficiency of all equipment is possible. In addition, it is easier to clean the floor area.

The assembly conditions depend on the local environment.

1.2 General explanation of the symbols

In addition to the symbols listed, other symbols in accordance with Regulation (EU) 2017/745 or ISO 15223 may be used if needed.n for setting them



Medical Device



Unique Device Identification



Equipotential bonding: Identifies equipotential bonding terminals on the housing of the isolating transformer; equipotential bonding ensures that resistance between all conductive materials is sufficiently low.



Connection to protective conductor:
Connects conductors, equipment units, conducting parts, main earth terminals and earth



Follow the instruction manual



Alternating current



Total load rating (support extrusion):
Max. total load rating (= total of all load ratings of mounted system components)
Please refer to the label for appropriate load.



Load rating (system components):
Please refer to the label for appropriate load.



Humidity limit



Barometric pressure limit

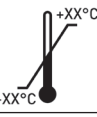

Temperature limit



General warning sign:
This symbol is used at the socket strips. The overall rating given on the name plate must not be exceeded.

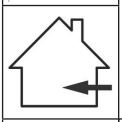

Only suitable for the interior

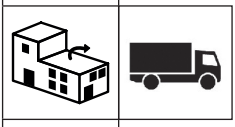

Distributed by



Importer



Manufacturer



Date of manufacture

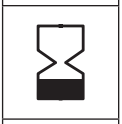

Use by date

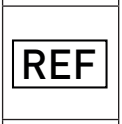

Item number

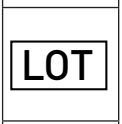

Batch code

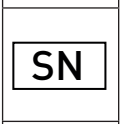

Serial number



Adjustment of the clamping force (tilt and swivel unit)



Set load:
Describes the load range and also the direction of rotation for setting them.



Brake:
Information about positioning of the support arm in the event of device acceptance and indicates the direction for release and blocking the lockingfunction.



Warning of hand injuries

1.3 Safety instructions

General

- Only those stationary carrier systems may be operated whose main voltage equipment has been tested and approved by appropriate, qualified personnel!
- Personnel (hospital and service personnel) working directly or indirectly with a stationary carrier system must be instructed!
- Setting adjustments may only be carried out by qualified personnel.
- Repairs may only be carried out by qualified personnel.
- Assembly must be in compliance with the structural engineering specifications for the building.

Operation

- Whenever the equipment is deployed (usage), it is important to ensure that persons are not injured and material assets are not damaged.

Connections

- Only devices that fulfil the requirements of IEC 60601-1 or are IEC-tested may be connected to the sockets/connecting lines.
- Additional medical equipment with connecting bolts for equipotential bonding are to be connected with the green-yellow cable to the optional equipotential bonding connecting bolts!



- Caution: The overall rating given on the nameplate must not be exceeded. Please observe that no further multiple sockets must be connected to an existing multiple socket.

Load capacity

- The total weight of the equipment and the accessories on the stationary carrier system may not exceed the permitted payload weight (see load capacity sticker on the support extrusion).
- The surface load imprinted on the system components may not be exceeded!
- The load shown on the fittings (e.g. infusion stand, jointed arms) may not be exceeded!

Infection protection

- Hygiene regulations are to be observed when cleaning!
- Give only cleaned and disinfected equipment and fittings to a service technician for maintenance and repair work!

Environmental protection

- Dispose of all cleaning and disinfection agent residue in a manner not harmful to the environment.

2 Assembly

2.1 Completeness

Unpack the stationary carrier system and check wether all the parts you have ordered have been included in the consignment.

2.2 Instruction for use / Assembly Instructions

Before you start assembling any equipment, you should read the Instruction for use or Assembly Instructions carefully. These are included with the stationary carrier systems, and the system and accessory components.



2.3 Horizontal swivel

Make sure that the swivel range of the system components matches the dimensions of the equipment and the ambient conditions in the working environment.

When system components and attached equipment are swivelled horizontally, they must not collide with other equipment, with other system components or with the wall. Any collision may result in damage to equipment and injuries to persons.

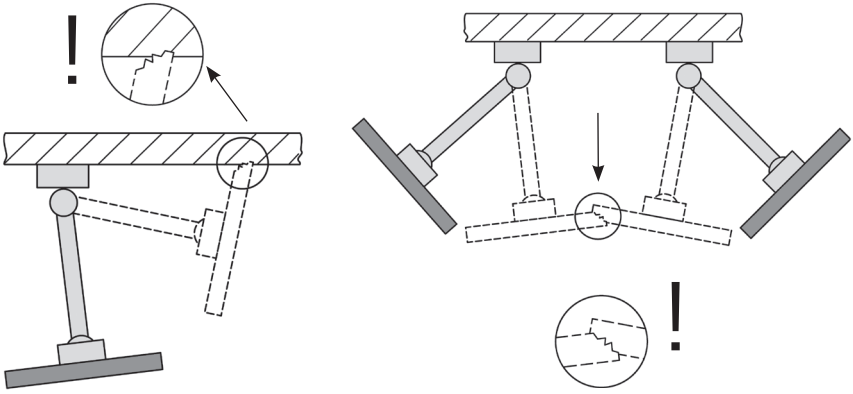

English

2.4 Tilting / rotating equipment

If system components are tiltable or rotatable, it is important to ascertain whether the clamping force is appropriate for the unit being fixed in place. If the force applied is incorrectly adjusted, the equipment is at risk of tilting over. Adjustment must therefore be carried out to ensure that the unit can be slightly tilted or rotated, while the unit remains stable in any desired position.

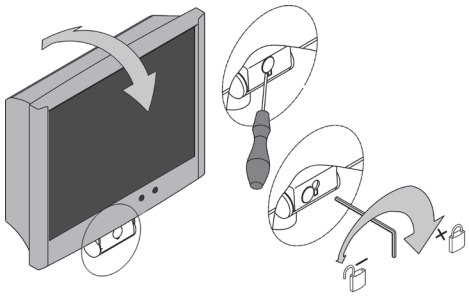

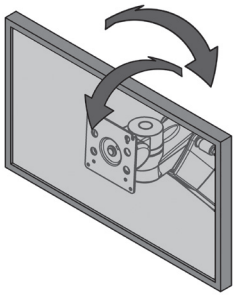

2.5 Variable height support arms (flexion-port)

When loading the system components that can be height adjusted, unconditionally observe the minimum and maximum permitted total weight. Also, due to safety reasons, please make sure that the space below the height-adjustable support arm (flexion-port) remains clear. In order to be able to set the support arm to the load, it must be placed into the horizontal position.

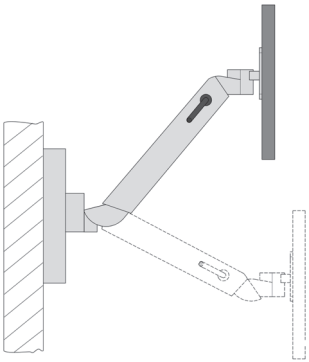

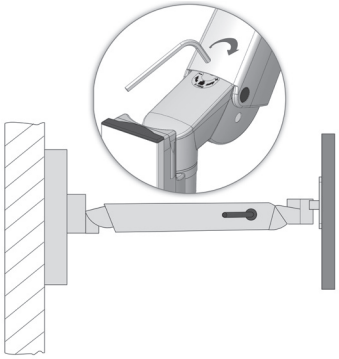

2.6 Wiring

Please observe the instructions as follows:

- So that there is no damage to the cable or failure of the device when swivelling, the cable must be sufficiently dimensioned.
- Possible sagging cables must under no circumstances be used as a handle.
- Please make sure that the enclosed assembly material is correctly applied, in accordance with the assembly instructions.
- When swivelling the arms, pay attention to possible cable loops present.

2.7 Attachment to existing infrastructure

When assembling to standard rails (vertical, horizontal), poles, ITD profiles, ceiling lights, supply ducts or manufacturer-specific connections, make sure that there is sufficient stability. As necessary, clarify with the manufacturer of the respective connection.

2.8 Fixing system components

Before you fix the units to the system components, you should ensure that the system components are firmly fixed in place. If any connections are not adequately secured, injuries to persons or damage to equipment may result.

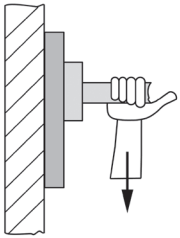

2.9 Load rating

Please note, that it is important to observe the maximum load rating (see chapter 8).

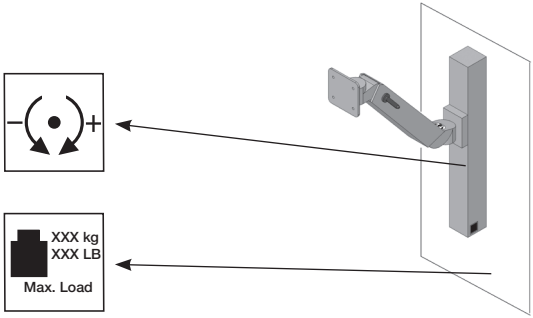

2.10 Assembly / Handling

2.10.1 Correct installation

When installing or mounting stationary carrier systems, to avoid risk of injury to patients or others or damage to medical devices, please ensure that adequate space is left between the carrier system and any equipment containing electric drive systems (e.g. hospital beds).

2.10.2 Shelves

Shelves can be removed or installed in another position. Loosen the screws, re-position the shelf and then screw the shelf tightly in position again. Check the safety-earth resistance.

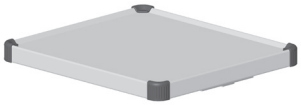

2.10.3 Drawers

Drawer unit blocks are provided with a latch mechanism. The drawers can be lifted out in the extended position. A label strip can be affixed to the front trim.



2.11 Additional mounting of system components

Additional mounting of ITD system components should only be executed by specialised staff.

2.12 Dismantling and repositioning system components and accessories

When system components and accessories are dismantled or repositioned, it is important to remove any units mounted on these elements before any changes are made. If this concerns the disassembly / assembly of the height-adjustable support arms flexion-port these must first be placed in the uppermost position and the clamping (brake) must be determined (refer to decal).

3 Electrical safety

3.1 Positioning of the electrical equipment

Make sure that electrical equipment on the stationary carrier system or the variable height support system flexion-port, lf-port does not get wet. Under no condition should you position the products, which may lead to loss of their fluidness, over the electrical equipment or extension lead in which fluidity may be permeate.

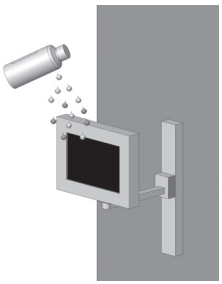

3.2 Support extrusion

The support extrusions (Economy and Profi) are able to accommodate socket strips and offers optimum cable routing for any cables supplying power to units. Under no circumstances should holes be drilled in any support extrusions (Economy, Profi, flat extrusion) because live cables carrying current may be routed in the extrusion.

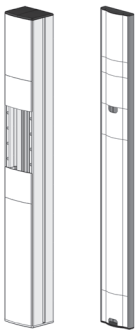

3.3 Gases

Electrical equipment should not be operated in the vicinity of gases, e.g. flammable gas used in anaesthesia or similar gases. The user is responsible for maintaining this requirement and for compliance with EN 60601-1-2 and EMC regulations.

3.4 Equipotential bonding

Equipotential bonding should be carried out for the stationary carrier system.
The equipotential bonding cable should be first connected to the base of the carrier system and then be connected to the equipotential bonding plug in the room. Next, connect the POAG supply cables to the POAG pins of the POAG plate or of the multiple sockets and the appliance.

3.5 Plug-in cable connector

Users of the stationary carrier system hould ensure that the cable connection between the cable system of the stationary carrier system and the equipment is a permanent connection and can only be removed using tools. Please order suitable accessories separately.

3.6 Combination of equipment

The following should be observed for combination of equipment on the stationary carrier sys tem:

- Auxiliary equipment connected to analogue and digital interfaces of the equipment must be certified in compliance with the relevant EN specifications (e. g. IEC 60950 for data-processing equipment and IEC 60601-1 for medical electrical equipment).
- Furthermore, all configurations must comply with the valid version of the standard IEC 60601-1. Anyone connecting additional equipment to the signal input or signal output is a system configurer and is therefore responsible for ensuring compliance with the valid version of the standard IEC 60601-1.

If you have any questions, you should contact your local dealer or technical services.

Please note: Make sure that this is also the case for adaptation of equipment in the power supply circuit (e. g. multiple socket strip).

3.7 Central power cutout

Equipment with life-sustaining functions must not be connected to a central on/off switch.

3.8 EMC

The Electromagnetic Compatibility (EMC) between items of electrical medical equipment or other / new combinations positioned on the stationary carrier system should be checked before the equipment is deployed in medical settings. The carrier system cannot be used in an NMR environment due to the presence of ferromagnetic materials.

Customer-specific carrier systems used within the nuclear spin environment must be tested by the customer for suitability for use due to the ferromagnetic materials they contain.

ITD GmbH excludes any liability in this respect!



3.9 Excluded from the final electrical inspection of system components and accessories

ITD GmbH exclude the following system components and accessories from the final electrical inspection:

- Multiple socket strips without additional protective conductors that are not wired in the mounting
- ME cables and appliance cables included
- POAG plates and cables included
- Non-electrified support systems
- Height adjustments and attachment parts to height adjustments
- Handles, mouse pads, drawers, drawer bodies and attachments (bottle mounting brackets, baskets, camera mounting brackets, infusion tripods, ...)
- Keyboard extensions and extendable shelves
- Computer holder at the top and bottom
- Support arms installed and monitor mounting brackets
- Conductive castors
- Secondary power circuit with insulation monitors are only excluded from the dielectric strength inspection!

3.10 Minimum safety

ITD GmbH is not aware of any item of equipment or accessory that reduces the minimum safety of the system. Only equipment not presenting a hazard may be used. If necessary, this should be clarified by means of a risk analysis (ISO 14971).

4 Mechanical and electrical height adjustment

Specific safety regulations must be observed for the „mechanical height adjustment“ using the „gas pressure“, as well as for the electro-mechanical height adjustment using „Linear drive“, in accordance with IEC 60601-1 „Mechanical Risk in Conjunction with Moving Parts“. Hereby:

- Take into consideration and adhere to the permitted distance between moving parts, in accordance with IEC 60601-1 in Table 20 (ISO 13857:2008).
- Products with height adjustment are manufactured and supplied ex works conforming to the standard, under consideration of the permitted safety distances. Due to the equipping of or replacement with ME devices and / or component, these distances change. This can result in a mechanical risk. The respective person who configures the system is responsible for adhering to the minimum distances required.
- The overall weight of the devices and accessories installed must not exceed the specified maximum overall payload of the height adjustment. Overloading results in damage to the height adjustment and loss of the warranty.
- Stored energy is released with the mechanical height adjustment using gas pressure. Thereby, for unloaded systems sudden, unbraked activation of the height adjustment can result in injuries and damage.
    - o In order to prevent injuries and damage, before installation and removal of the devices, place the height adjustment at the uppermost position („energy-free“).
    - o The height adjustable supporting arm system „flexion-port“ must also be fixed and secured at the uppermost position („energy-free“) with the aid of the clamping lever (refer to the separate user instructions for the „flexion-port“, as well as the risk notes on the supporting arm system).
- Unintended activation of the electro-mechanical height adjustment using the manual button can also result in injuries and damage.
    - o In order to prevent injuries and damage, before installation and removal of the devices, disconnect the height adjustment from the power supply.
    - o Servicing and maintenance tasks in the „interior area“ of the height adjustment, i.e. in the covered area within the supporting column not accessible from outside, must only be carried out by specialists.
    - o Caution: If operating the height adjustment using a remote control, make sure that no persons are in the hazard area.

English

5 Miscellaneous

5.1 Cleaning and disinfection

Caution: Disconect from power before cleaning and disinfection! Before using the stationary carrier system in a medical environment, the user is responsible for ensuring that it is cleaned and disinfected in accordance with the use in question.

The stationary carrier system and the variable height support arm system flexion-port, lf-port must be cleaned using commercial all-purpose cleaning agents (neutral cleaning agents). For disinfecting, commercial disinfectants approved for disinfecting surfaces or wipe disinfection can be used. The disinfection agents must be used solely as disinfection for wiping, in accordance with the manufacturer's specification.

For example, ITD have carried out tests using the following disinfectants:

Product	Manufacturer
Bacillol AF	Bode
Cleanisept Wipes	Dr. Schumacher
Optisal N	Dr. Schumacher
Mikrobac Tissues	Bode
Mikrozid Sensitive Wipes	Schülke
Mikrozid AF Wipes	Schülke
Mikrozid PAA Wipes	Schülke
Terralin Protect	Schülke
Incidin PLUS	Ecolab
Incidin Foam	Ecolab
Incidin Oxywipe S XL	Ecolab
Kohrsolin FF	Hartmann
Dismozol plus	Hartmann

If complete disinfection is required, assemblies can be disassembled by a specialist and wipe disinfected when disassembled.

5.2 Service / Repair

The stationary carrier system and the variable height support arm system flexion-port, lf-port should be always be cleaned and disinfected with a suitable cleaning agent before any service operations are undertaken, and before the cart is returned for purposes of repair!

Repairs to the stationary carrier system and the variable height support arm system flexion-port, lf-port should only be effected by professional personnel. We recommend consulting ITD GmbH on all matters relating to service activities. You will find our service addresses at the beginning of this manual.

5.3 Environmental conditions

The stationary carrier system and the variable height support arm system flexion-port, lf-port are designed for standard operation in hospitals and medical practices.

Operation:

Ambient temperature:	10° C to 40° C
Air humidity:	30 % to 75 %
Air pressure:	700 hPa to 1060 hPa
Protection class:	IP20

Transport/storage:

Ambient temperature:	-25°C to 70°C
Air humidity:	10% to 95%
Air pressure:	500 hPa to 1200 hPa

5.4 Disposal



Separate Collection for Electrical and Electronic Equipment in compliance with Waste Electrical and Electronic Equipment Directive WEEE (registration number for Germany: DE35464575). All electrical and electronic equipment provided with systems released after 13 August 2005 is marked with a Separate Collection for Electrical and Electronic Equipment symbol, indicating that this equipment must undergo separate collection for disposal, in countries where EU directive 2002/96/EC is in effect.

5.5 Spare parts

Only spare parts authorized by ITD may be used. A sticker with an order number is attached to the support extrusion of your stationary carrier system. All order numbers and the associated spare parts are archived at ITD GmbH.

6 Accessories

A comprehensive range of accessories is provided in our catalogues or under www.itd-cart.com (information for dealers).

7 Maintenance

The stationary carrier system and the varialble height support arm flexion-port, lf-port have been developed and constructed for many years of trouble-free use. Check the functional capability of the following parts every 12 months in order to guarantee safety.

Support arms:

- Rotating and tilting functions smoothly, without excess play.

Variable height support arms (flexion-port, lf-port):

- The height adjustment functions freely, the raising force is adjusted to the weight of the device.

Shelves:

- Check whether the mounting screws have been tightened and whether the shelf is stable and flat.

Socket strips:

- Check the main cable for damage and firm seating.

Auxiliary sockets:

- Check the cable for damage and firm seating.

Serial number:

- Compare the serial number of the stationary carrier system and the variable height support arm system flexion-port with the data of the equipment log book.

If you encounter any problems during these checks you should contact your supplier immediately.

8 Technical data

8.1 Load capacity modul-port (Stationary carrier systems and components)

• Support extrusion, total added load depends on lenght	25-150 kg / 55-330 lbs
• Monitor holder with VESA 75 / 100 adaptation	up to 18 kg / 39.6 lbs
• Monitor holder with universal adapter	up to 14 kg / 30.8 lbs
• Monitor holder with Table Top Mount adaptation	up to 14 kg / 30.8 lbs
• Shelf	10 kg / 22 lbs
• Drawer	3 kg / 6.6 lbs
• Keyboard holder	5 kg / 11 lbs
• Mouse pad	3 kg / 6.6 lbs

8.2 Load capacity mf-port (rigid and pivot support arms)

• Support arm, rigid	up to 23 kg / 50.6 lbs
• Swivel arm, 1-fold	up to 23 kg / 50.6 lbs
• Swivel arm, 2-fold	up to 18 kg / 39.6 lbs

8.3 Load capacity rm-port (pivot support arms)

• Swivel arm, 1-fold	up to 23 kg / 50.6 lbs
• Swivel arm, 2-fold (L250 mm + L250 mm)	up to 23 kg / 50.6 lbs
• Swivel arm, 2-fold (L325 mm + L325 mm)	up to 18 kg / 39.6 lbs

8.4 Load capacity flexion-port (variable height support arm systems)

• flexion-port (depends on model)	3-10 kg / 6.6-22 lbs 8-14 kg / 17.6-30.8 lbs 11-20 kg / 24.2-44 lbs
• Tilt and swivel unit	up to 14 kg / 30.8 lbs
• Post (“Down-Post”)	10 kg / 22 lbs
• Mouse pad	3 kg / 6.6 lbs

8.5 Load capacity lf-port (variable height support arms)

• lf-port (depending on model)	0–7 kg / 0–15.4 lbs 0–5 kg / 0–11 lbs 5–10 kg / 11–22 lbs

Responsible for content: ITD GmbH.

CH REP

Johner Medical Schweiz GmbH
Tafelstattstrasse 13a
6415 Arth
Schweiz

ITD GmbH
Jahnstrasse 1
84347 Pfarrkirchen
Germany
sales@itd-cart.com
www.itd-cart.com

DS.0219.799 - Index 004 - 09/2026 - Printed in Germany. Subject to change without notice.